PHOENIX

SPECIFICATIONS

VIVID SLIMLINE

RAIL SHOWER

PRODUCT CODE:	VS685 CHR
FINISH:	CHROME
WELS:	3 STAR - 6.5 LT/MIN

INFORMATION:

TEMPERATURE RATING:	MIN 1° - MAX 75°
PRESSURE RATING:	MIN 150 kPa - MAX 500 kPa

CONSUMER UNIT:

SIZE:	L 720MM x W 185MM x H 80MM
GROSS WEIGHT:	2.52 KG
BARCODE EAN-13:	9 320594020 897

AVAILABLE IN:

CHROME

FOR MORE INFORMATION VISIT
www.phoenixtapware.com

MAINTENANCE AND CARE:

- All surfaces should be cleaned with mild liquid detergent or soap and water.
- Do not use cream cleaners or citrus based cleaning products, as they are abrasive.
- Use of unsuitable cleaning agents may damage the surface. Any damage caused in this way will not be covered by warranty.

PACKAGING INCLUDES

- 1 x Rail Shower
- 1 x Installation kit
- 1 x Installation instructions
- 1 x Warranty card

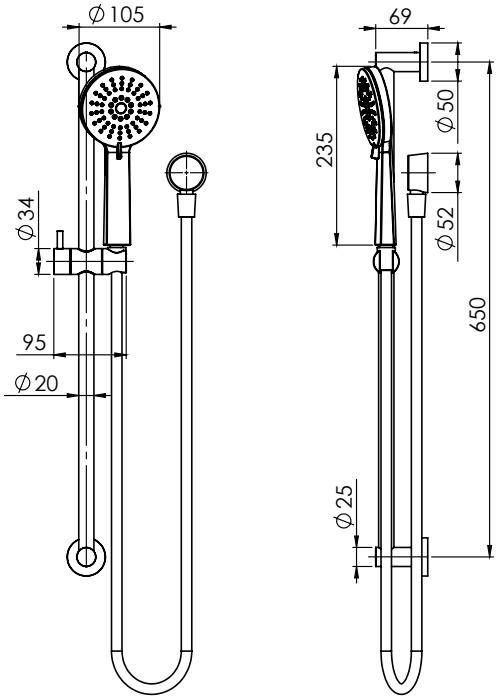

WATER RATING
Licence No. 0133
6.5 litres per minute
www.waterrating.gov.au

15 YEAR WARRANTY PRODUCT & PARTS

1 YEAR WARRANTY PARTS & LABOUR

PLEASE CLICK HERE TO VIEW FULL WARRANTY

While we aim to ensure the specifications shown are correct at time of printing, Phoenix Tapware reserves the right to make modifications without prior notice. Always use the physical product measurements for mark-ups and roughing-in as the line drawing shown may differ from the actual product over time. All measurements are shown in millimetres.

www.phoenixtapware.com.au
03 9780 4200